VC5836 FECHADURA DE SOBREPOR



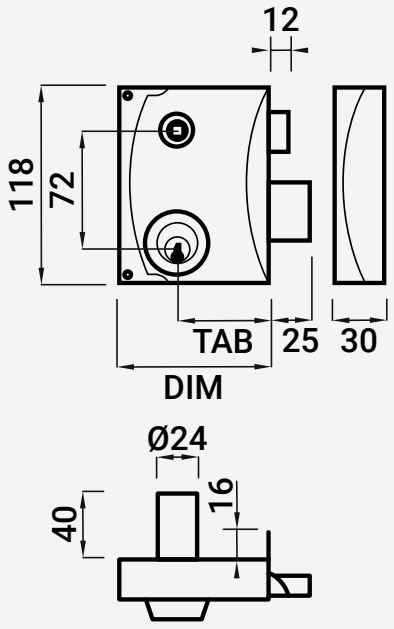

		Dim	TAB	
Castanho	205001218	70	35	Esq
	205001219	70	35	Dir
	205001220	80	45	Esq
	205001221	80	45	Dir
	205001222	90	55	Esq
	205001223	90	55	Dir
	205001224	100	65	Esq
	205001225	100	65	Dir
Branco	205001226	70	35	Esq
	205001227	70	35	Dir
	205001228	80	45	Esq
	205001229	80	45	Dir
	205001230	90	55	Esq
	205001231	90	55	Dir
	205001232	100	65	Esq
	205001233	100	65	Dir
Preto	205001234	70	35	Esq
	205001235	70	35	Dir
	205001236	80	45	Esq
	205001237	80	45	Dir
	205001238	90	55	Esq
	205001239	90	55	Dir
	205001240	100	65	Esq
	205001241	100	65	Dir
Cinza	205001242	70	35	Esq
	205001243	70	35	Dir
	205001244	80	45	Esq
	205001245	80	45	Dir
	205001246	90	55	Esq
	205001247	90	55	Dir
	205001248	100	65	Esq
	205001249	100	65	Dir
Dourado	205001250	70	35	Esq
	205001251	70	35	Dir
	205001252	80	45	Esq
	205001253	80	45	Dir
	205001254	90	55	Esq
	205001255	90	55	Dir
	205001256	100	65	Esq
	205001257	100	65	Dir
Bronze	205001258	70	35	Esq
	205001259	70	35	Dir
	205001260	80	45	Esq
	205001261	80	45	Dir
	205001262	90	55	Esq
	205001263	90	55	Dir
	205001264	100	65	Esq
	205001265	100	65	Dir